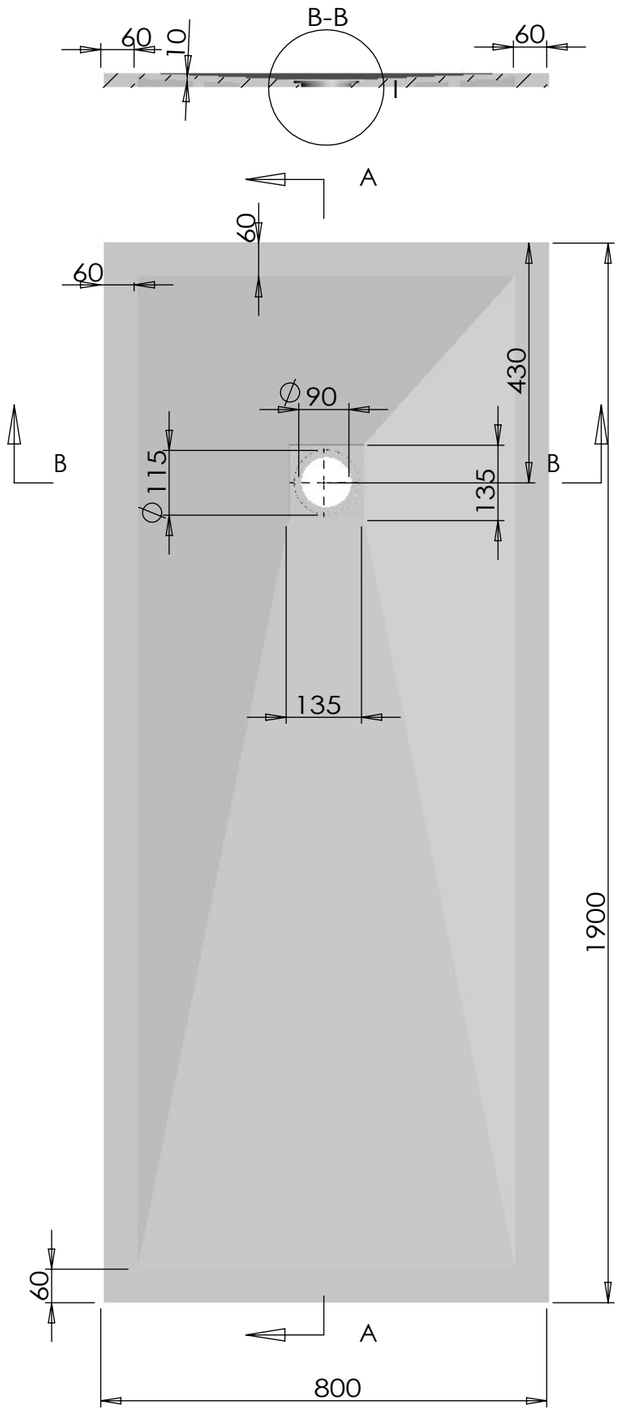

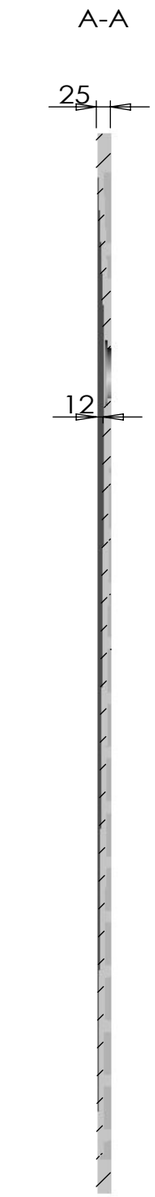

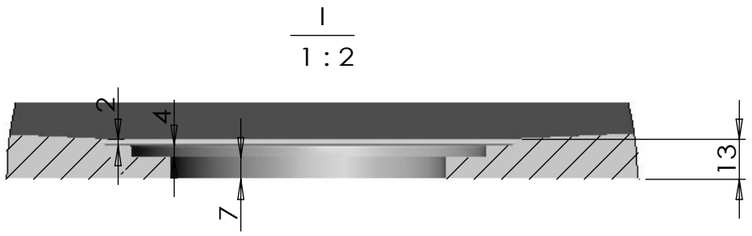

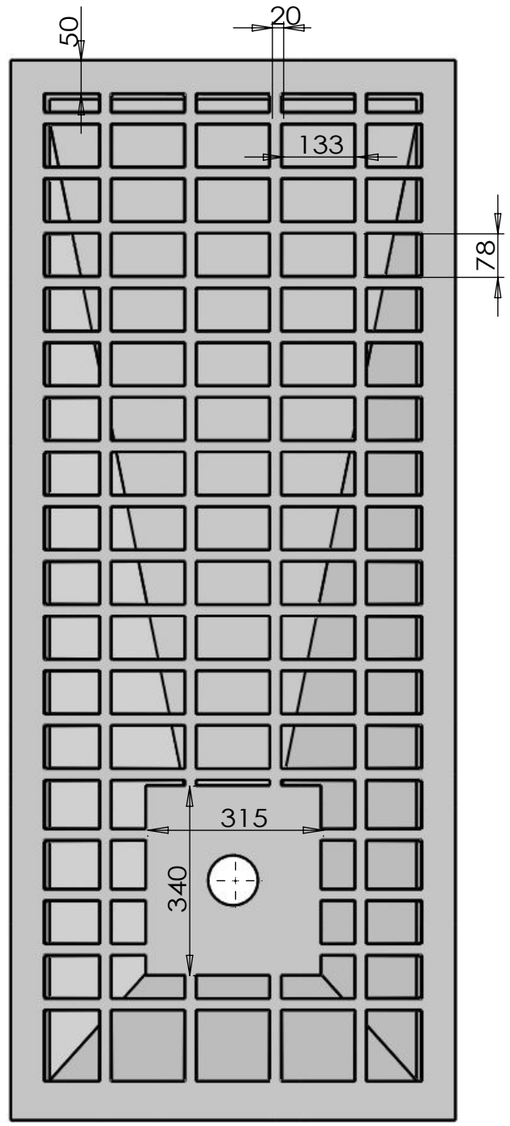

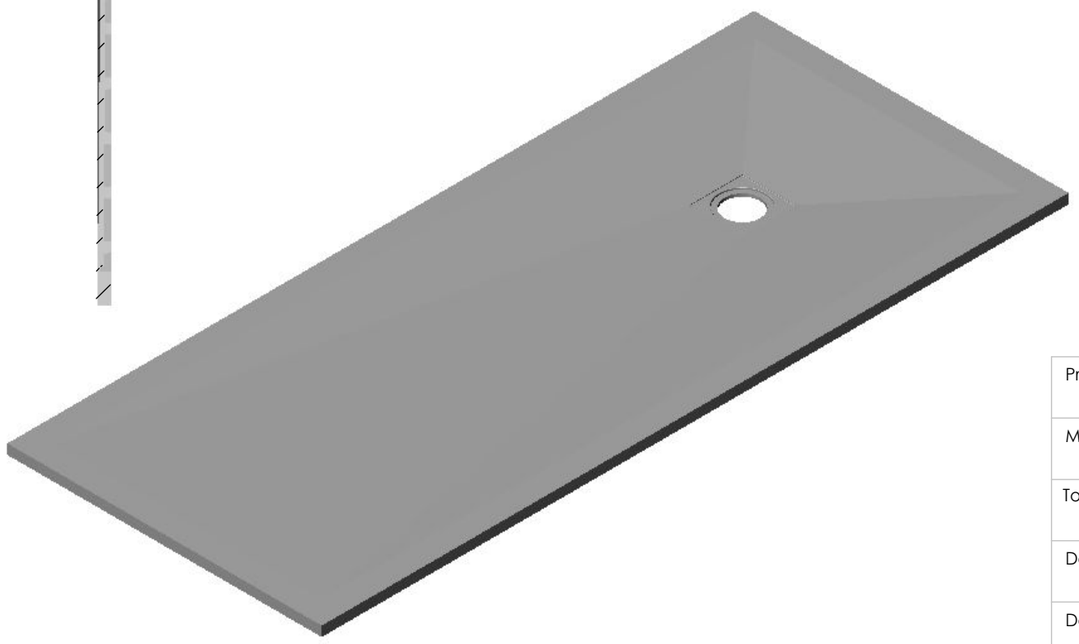

Project: 1900x800x25	
Material:	Surface:
Tolerance: ±3mm	Logo: DAYA
Design: Kendy	
Date: 2017.06.14	